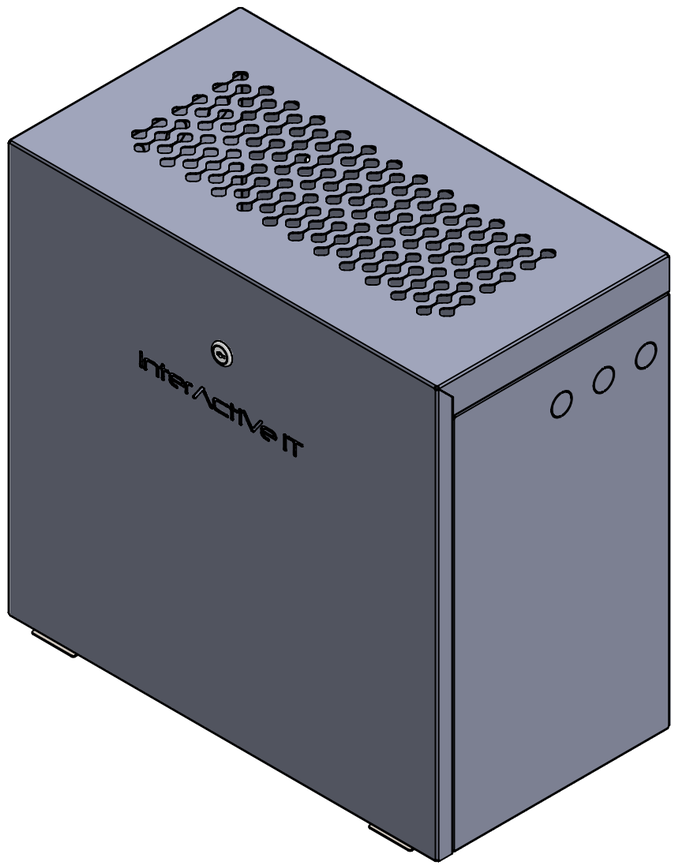
InterActive IT

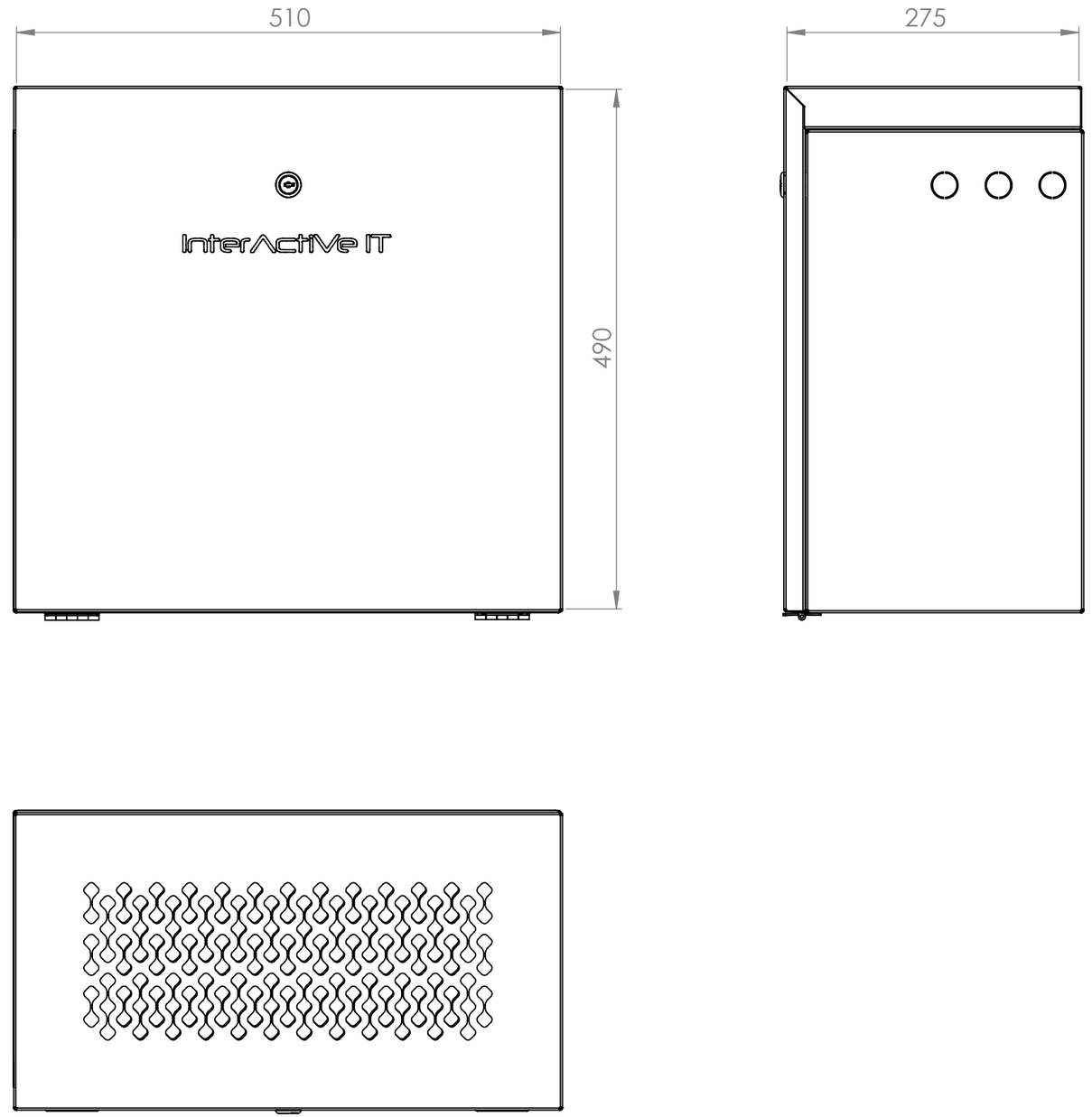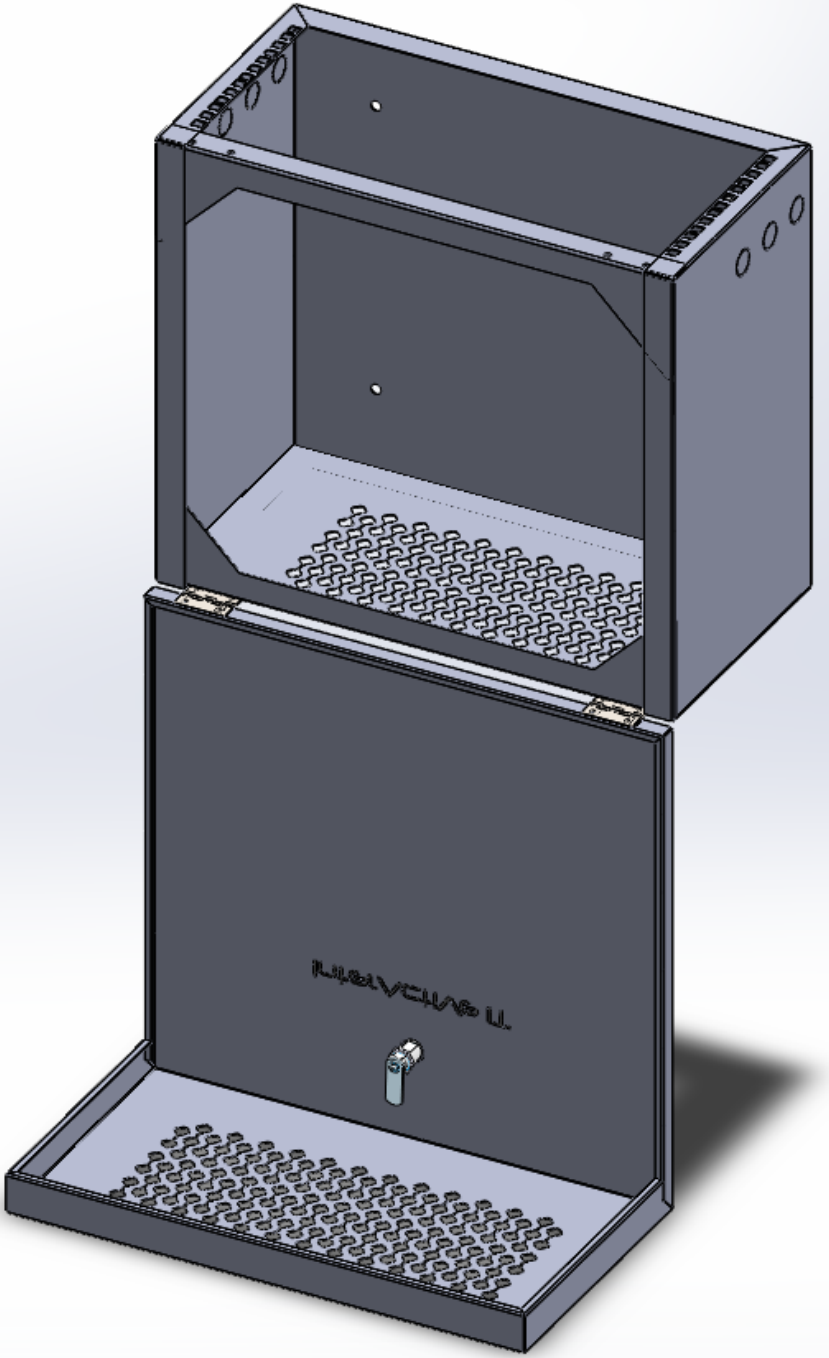
510
275
490
InterActive IT